SIEMENS

Data sheet 8WD4308-0DC

foot individually, metal, for pipe mounting, pipe lengths > 400 mm, accessory for signaling columns, with diameter 70 mm

General technical data	
product brand name	SIRIUS
product designation	Foot for mounting on pipes
material	aluminum
color	black
fastening method	floor mounting
reference code	
● acc. to DIN EN 61346-2	U
● acc. to IEC 81346-2	U

Ambient conditions	
ambient temperature during operation	-20 ... +50 °C
height	31 mm
width	70 mm

Certificates/ approvals

General Product Approval	EMC	Declaration of Conformity	Marine / Shipping
UL, EAC	RCM	CE EG-Konf., UK Declaration of Conformity	ABS

Marine / Shipping	other
PRS, RINA	Confirmation

Further information

Information- and Downloadcenter (Catalogs, Brochures,…)
https://www.siemens.com/ic10
Industry Mall (Online ordering system)
https://mall.industry.siemens.com/mall/en/en/Catalog/product?mlfb=8WD4308-0DC
Cax online generator
http://support.automation.siemens.com/WW/CAXorder/default.aspx?lang=en&mlfb=8WD4308-0DC
Service&Support (Manuals, Certificates, Characteristics, FAQs,...)
https://support.industry.siemens.com/cs/ww/en/ps/8WD4308-0DC
Image database (product images, 2D dimension drawings, 3D models, device circuit diagrams, EPLAN macros, ...)
http://www.automation.siemens.com/bilddb/cax_de.aspx?mlfb=8WD4308-0DC&lang=en

Subject to change without notice
© Copyright Siemens

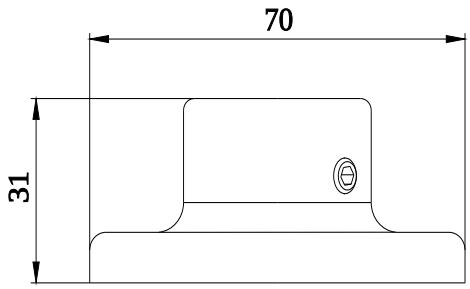

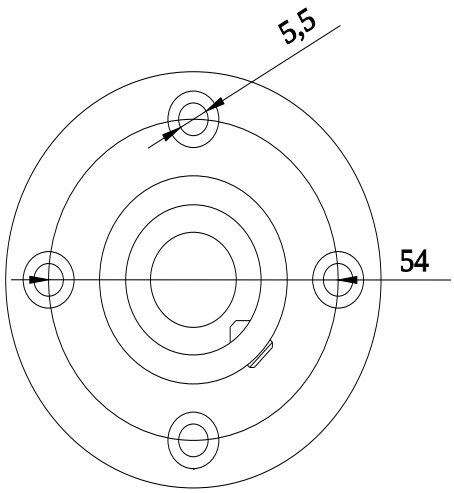

last modified: 12/21/2020

Subject to change without notice
© Copyright Siemens